19GES28 - Engineering Mechanics

Dr S.Sudhagar M.E., PhD.
Assistant Professor
Mechanical Engineering

Unit I- Basics & Statics of Particles

- Introduction
- Units and Dimensions
- Laws of mechanics
- Lami`s Theorem
- Parallelogram law and Triangle law
- Principle of transmissibility
- Vector operations
- Equilibrium of a particle in space
- Single Equivalent Force

Introduction

- Mechanics is the study of forces that act on bodies and the resultant motion that those bodies experience.
- Engineering Mechanics is the application of mechanics to solve problems involving common engineering elements.

Branches of Engg Mechanics

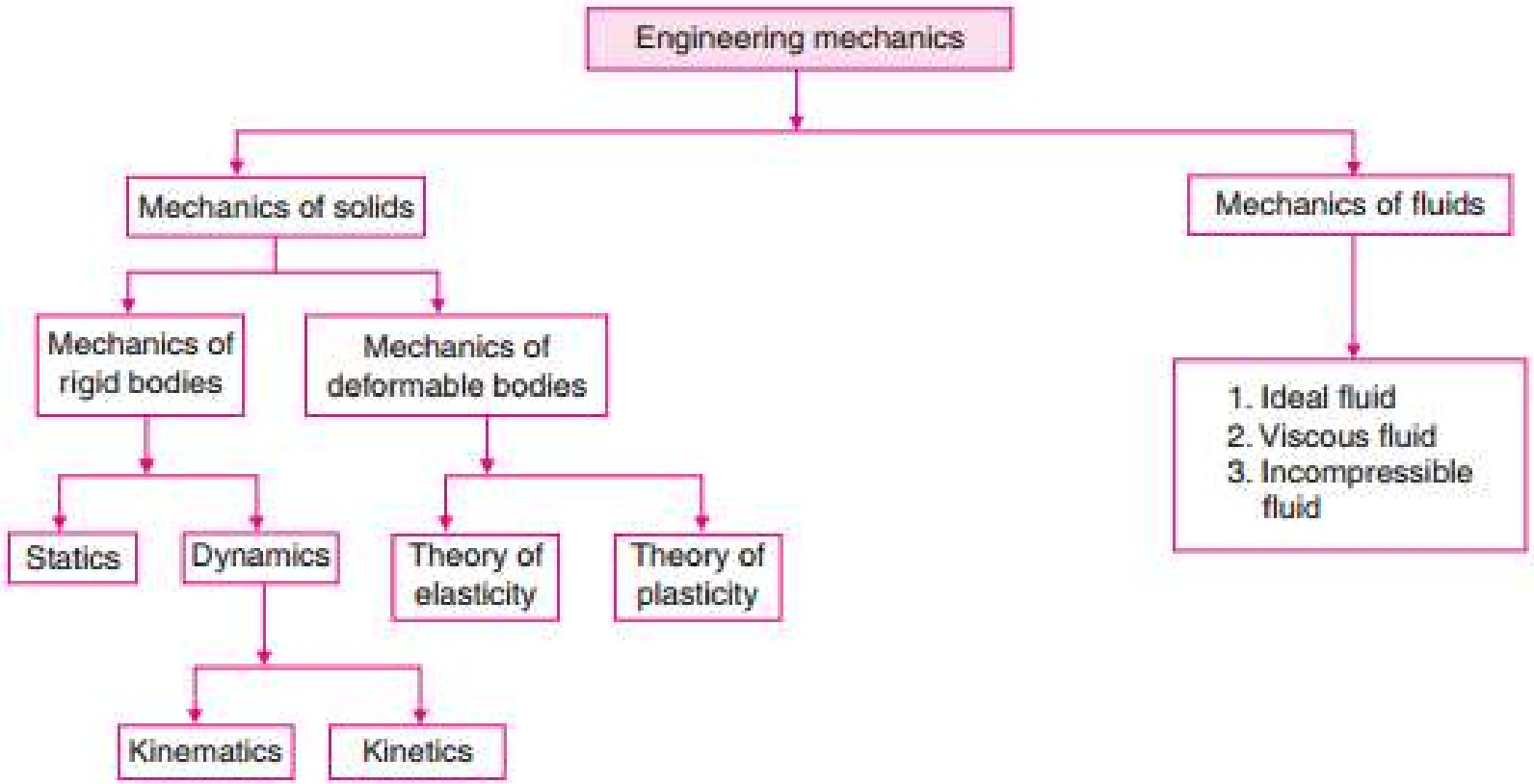

Units and Dimensions

Quantity	**Unit**
Area	m^2
Volume	m^3
Velocity	m/s
Acceleration	m/s^2

Laws of Mechanics

- Newton`s First Law

  It states that every body continues in its state of rest or of uniform motion in a straightline unless it is compelled by an external agency acting on it

Laws of Mechanics

- Newton`s Second Law

  It states that the rate of change of momentum of a body is directly proportional to the impressed force and it takes place in the direction of the force acting on it.

$$\mathbf{F \propto m \times a}$$

Laws of Mechanics

- Newton`s Third Law

  It states that for every action there is an equal and opposite reaction.

Lami`s theorem

- *If a particle acted upon by three forces remains in equilibrium then, each force acting on the particle bears the same proportionality with the since of the angle between the other two forces". Lami's theorem is also known as law of sines.*

Principle of Transmissibility

- *According to this law the state of rest or motion of the rigid body is unaltered if a force acting on the body is replaced by another force of the same magnitude and direction but acting anywhere on the body along the line of action of the replaced force.*
  - *Principle of Transmissibility* - Conditions of equilibrium or motion are not affected by *transmitting* a force along its line of action.
    NOTE: **F** and **F**' are equivalent forces.

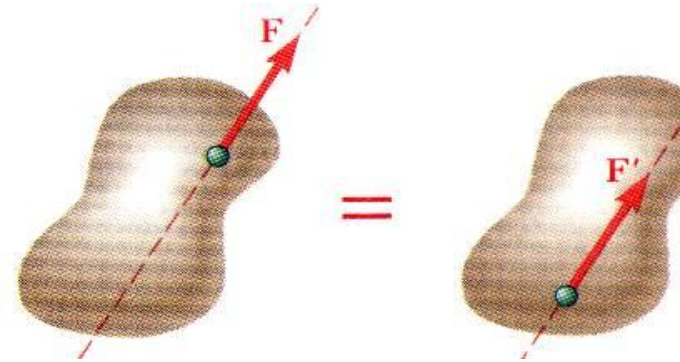

Parallelogram Law

- *According to this law the state of rest or motion of the rigid body is unaltered if a force acting on the body is replaced by another force of the same magnitude and direction but acting anywhere on the body along the line of action of the replaced force.*

Triangle Law

- *If two forces acting on a body are represented one after another by the sides of a triangle, their resultant is represented by the closing side of the triangle taken from first point to the last point.*

Equilibrium of a particle in space

- Free Body diagram

  It is a diagram of the body in which the bodies under consideration are freed from all contact surfaces and all the forces acting on it are clearly indicated.

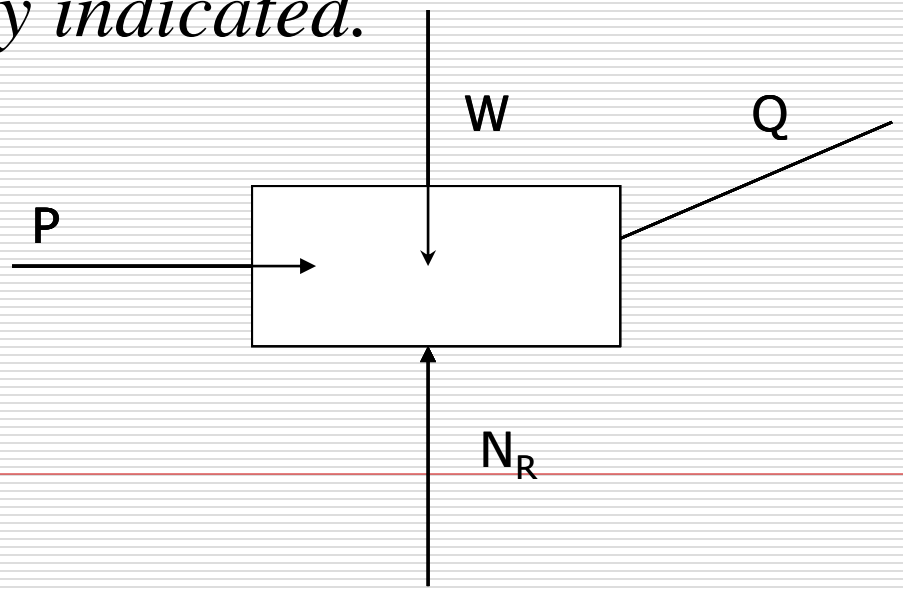

Problems

1. Find the projection of a force on the line joining A = (-1, 2, 2) and B (2, -1, -3)

   Solution:

   The position vector = (2i – j -3k) – (-+2+2) =

   3 - 3-5

   Magnitude of AB = Unit vector AB = 0.457-0.457

   Projection of on the line AB = unit vector along AB

   = 2× 0.457 + 3× 0.457 – 5 × 0.762

   = -1.525

Problems

2. Determine the force required the hold the 4kg lamp in position

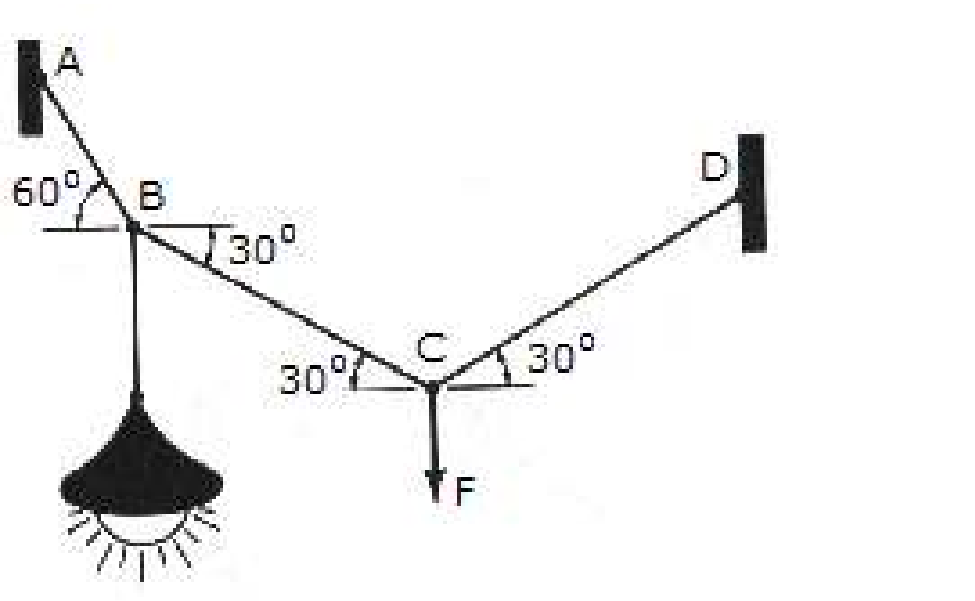

Answer: F= 39.2N

Problems

3. The joint *O* of a space frame is subjected to four forces. Strut *OA* lies in the x-y plane and strut *OB* lies in the *y-z* plane. Determine the force acting in each if the three struts required for equilibrium of the joint. Angle = 45°.

Answer : F = 56.6 lb, R = 424 lb, P = 1000 lb

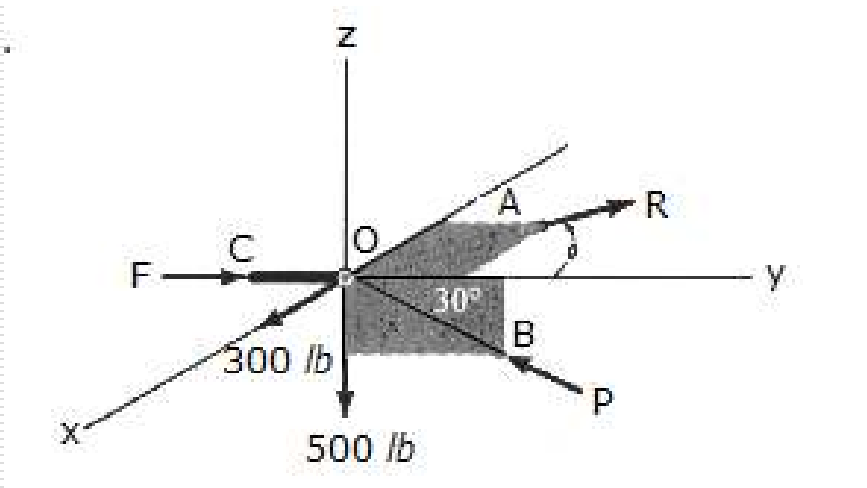

Unit II- Equilibrium of Rigid bodies

- Free body diagram
- Types of supports and their reactions
- Moments and Couples
- Moment of a force about a point and about an axis
- Varignon's theorem
- Equilibrium of Rigid bodies in two dimensions
- Equilibrium of Rigid bodies in three dimensions

Free Body Diagram

It is a diagram of the body in which the bodies under consideration are freed from all contact surfaces and all the forces acting on it are clearly indicated.

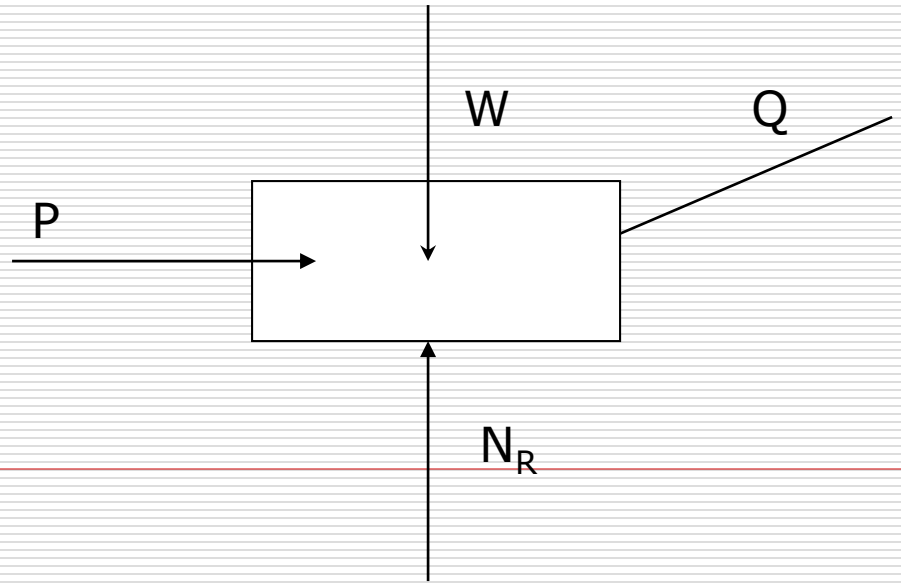

Beam

- A beam is a structural member used to support loads applied at various points along its length

Types of supports

- Simple Support

  If one end of the beam rests on a fixed support, the support is known as simple support

- Roller Support

  Here one end of the beam is supported on a roller

- Hinged Support

  The beam does not move either along or normal to the axis but can rotate.

Types of supports

- Fixed support

  The beam is not free to rotate or slide along the length of the beam or in the direction normal to the beam. Therefore three reaction components can be observed. Also known as bulit-in support

Types of supports

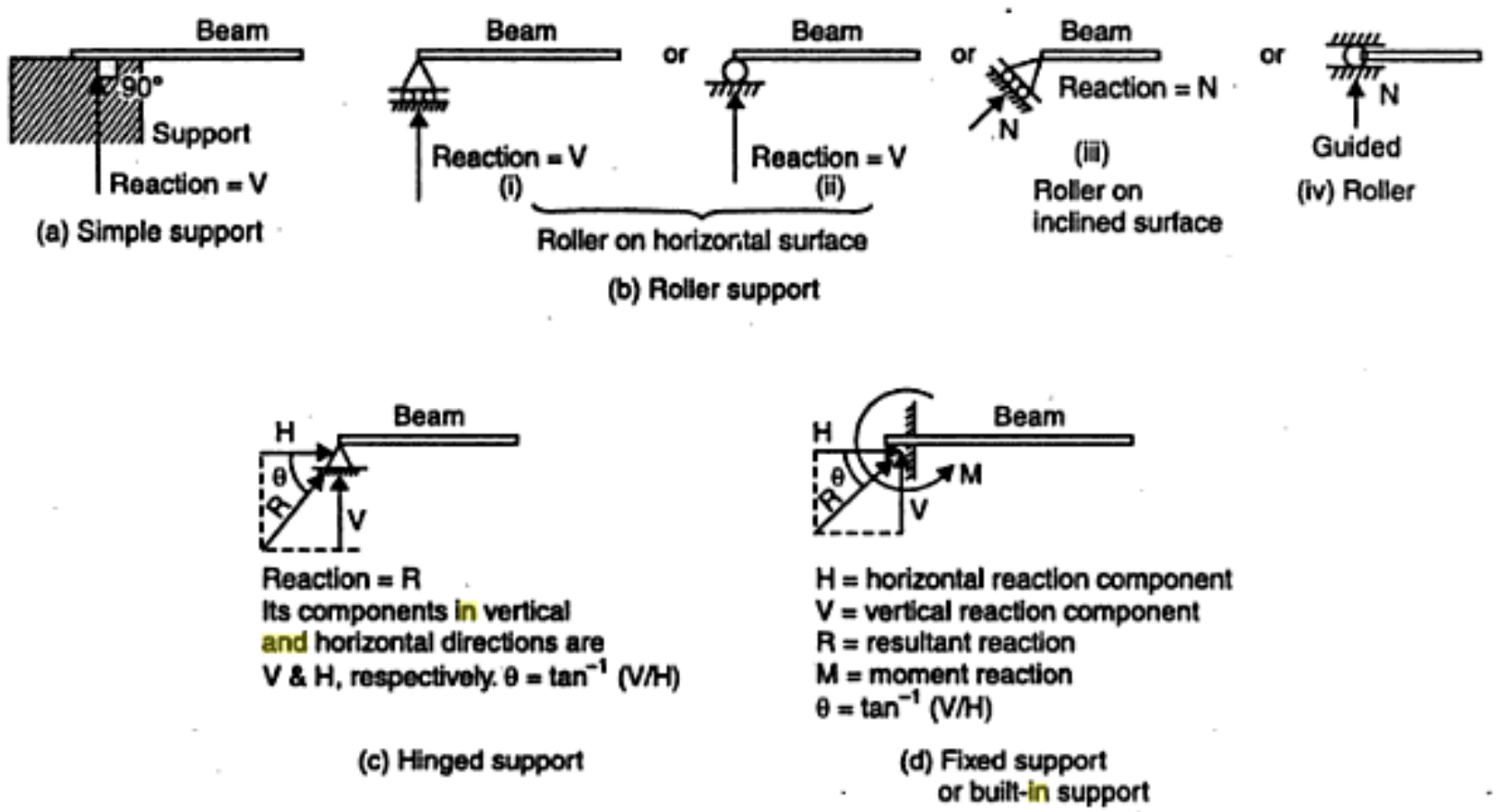

Types of beams

- Simply supported beam
- Fixed beam
- Overhanging beam
- Cantilever beam
- Continuous beam

Types of Loading

- Concentrated load or point load
- Uniformly distributed load(udl)
- Uniformly Varying load(uvl)
- Pure moment

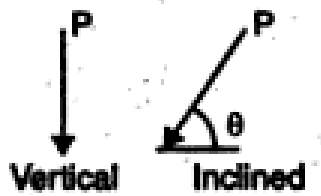

(a) Concentrated or point load

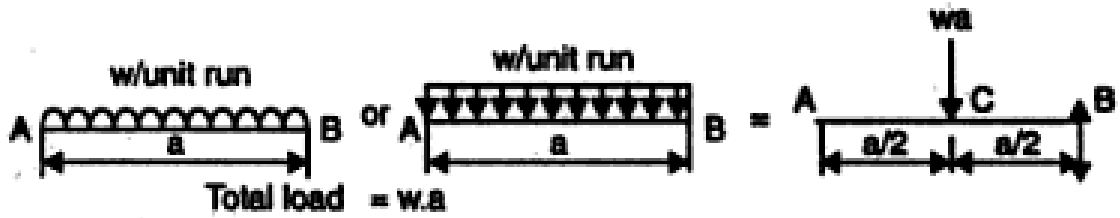

(b) Uniformly distributed load (udl)

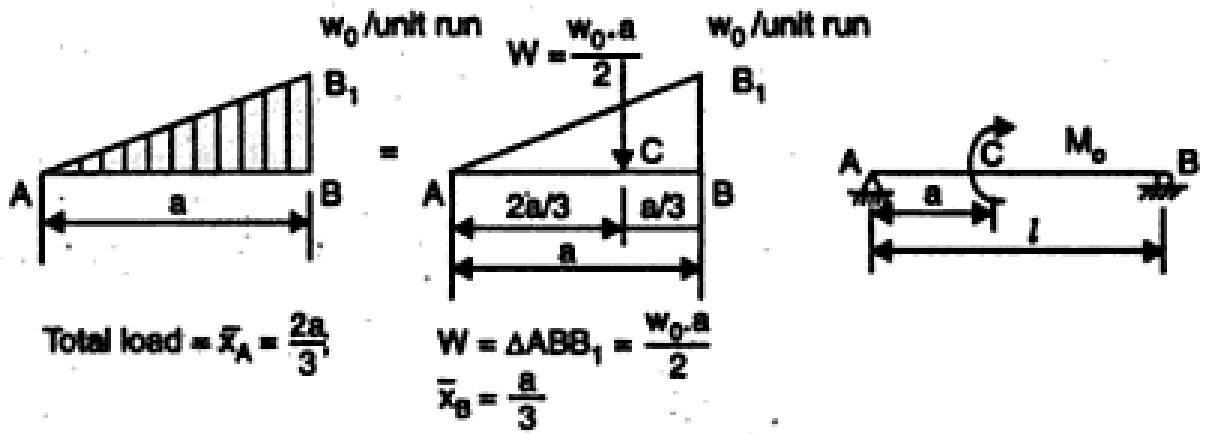

(c) Uniformly varying load (uvl)

(d) Pure moment

Problem

1. Find reactions of supports for the beam as shown in the figure (a)

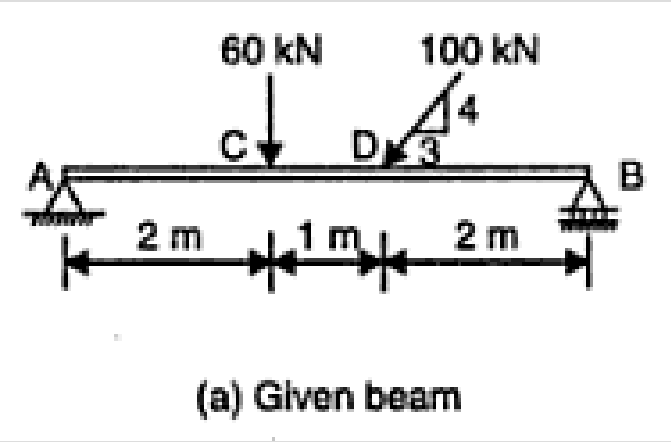

(a) Given beam

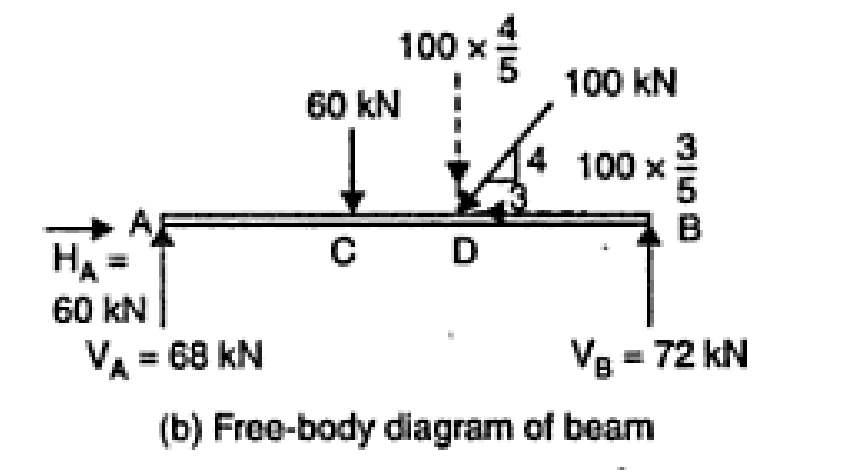

(b) Free-body diagram of beam

Problem

Sol. By using $\Sigma F_h = 0$, we get

$$\xrightarrow{+} H_A - 100 \times \frac{3}{5} = 0, \quad \therefore \quad H_A = 100 \times \frac{3}{5} = \mathbf{60\ kN} \rightarrow \quad \textbf{Ans.}$$

By $\Sigma M_B = 0$, we get

$$+ V_A \times 5 - 60 \times 3 - \left(100 \times \frac{4}{5}\right) \times 2 = 0 \quad \text{or,} \quad 5V_A - 180 - 160 = 0$$

$$\therefore \qquad V_A = \frac{1}{5} \times (180 - 160) = \mathbf{68\ kN} \uparrow \quad \textbf{Ans.}$$

And, finally by using $\Sigma F_v = 0$, we get

$$(V_A + V_B)\uparrow - 60 - 100 \times \frac{4}{5} = 0$$

$$V_B = 60 + 100 \times \frac{4}{5} - V_A = 140 - 68 = \mathbf{72\ kN} \uparrow \quad \textbf{Ans.}$$

Varignon`s theorem

- The moment about a give point *O* of the resultant of several concurrent forces is equal to the sum of the moments of the various moments about the same point *O*.

$$\vec{r}\times\left(\vec{F}_1+\vec{F}_2+\cdots\right)=\vec{r}\times\vec{F}_1+\vec{r}\times\vec{F}_2+\cdots$$

  - Varigon's Theorem makes it possible to replace the direct determination of the moment of a force ***F*** by the moments of two or more component forces of ***F***.

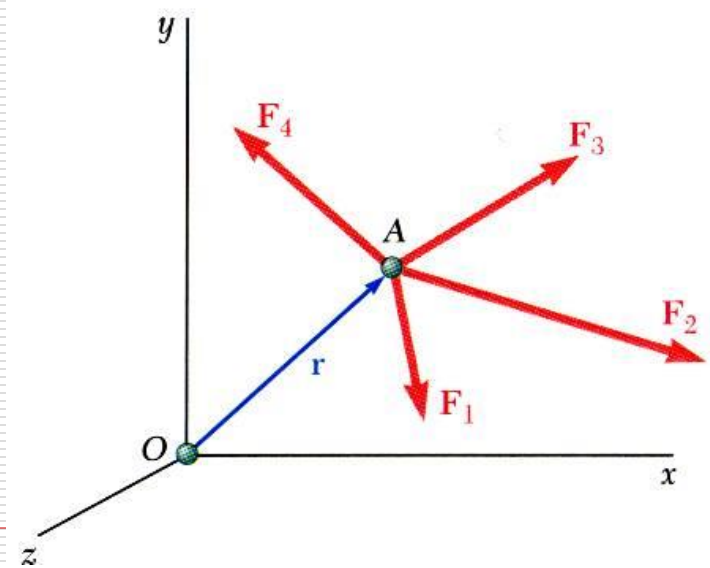

Moment

- *The moment of a force about a point or axis measures of the tendency of the force to cause the body to rotate about the point or axis.*

$$M = F\,d$$

Moment

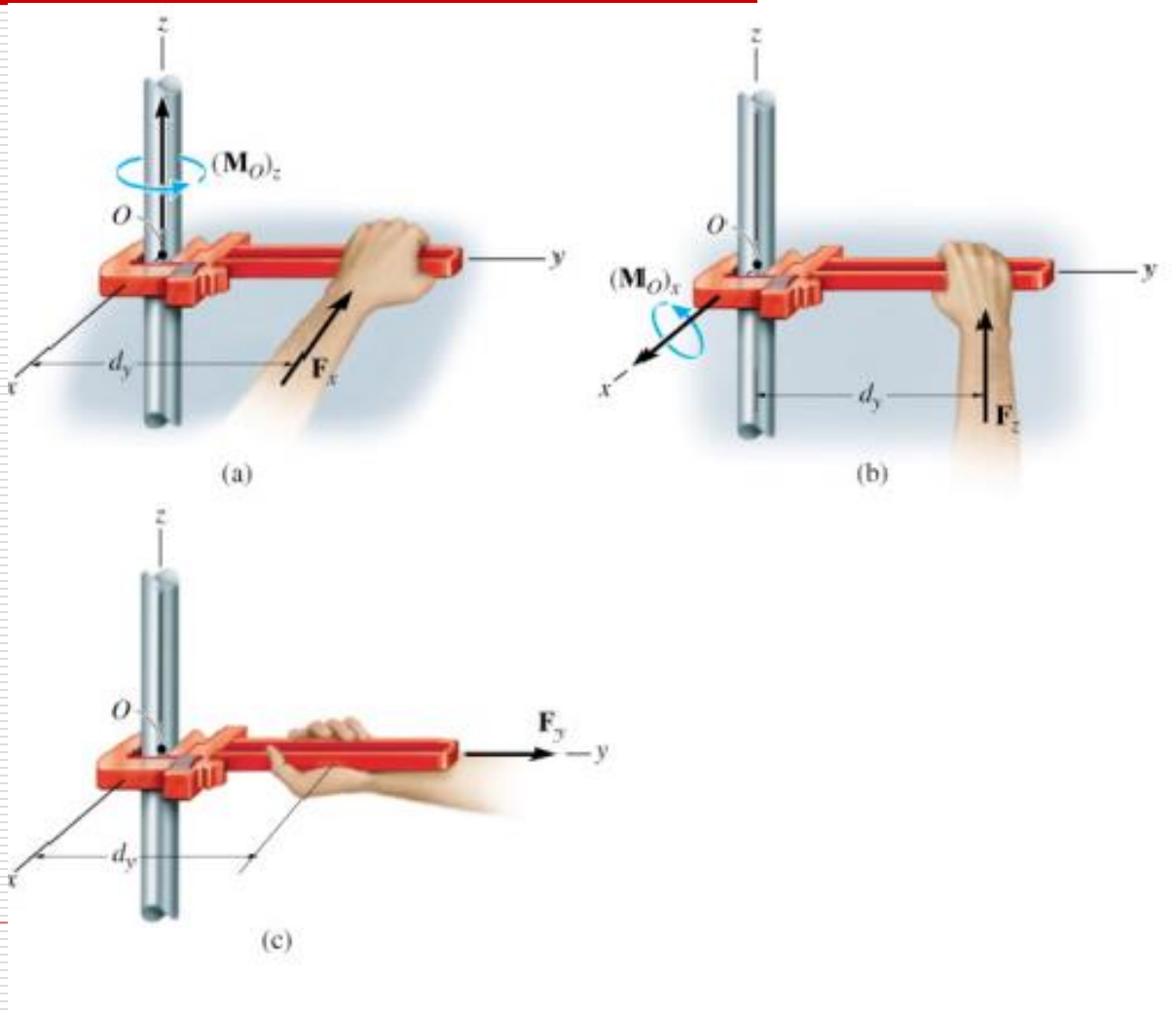
z
$(\mathbf{M}_O)_z$
O
y
x
d_y
$\mathbf{F}_x$
(a)
z
O
$(\mathbf{M}_O)_x$
y
x
d_y
$\mathbf{F}_z$
(b)
z
O
$\mathbf{F}_y$
y
x
d_y
(c)

Problem

1. A 200 N force acts on the bracket shown below. Determine the moment of the force about point A.

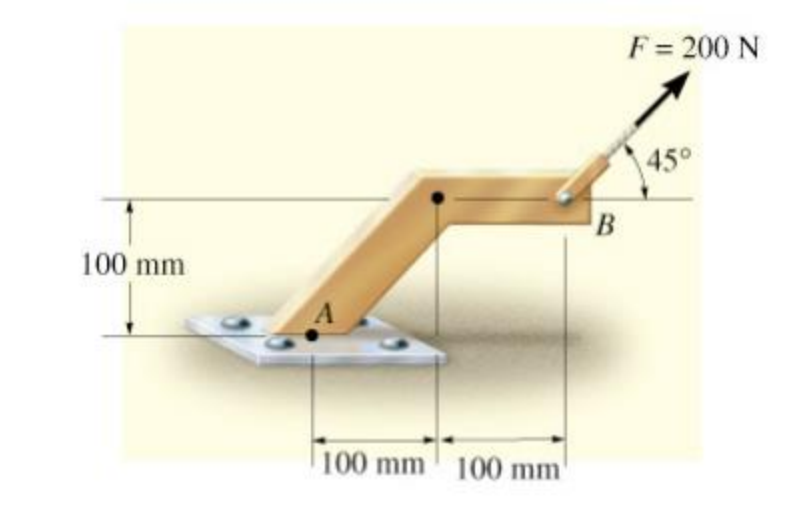

Answer: 14.1N-m

Problem

2. Determine the moment of each of the three forces about point A. Solve the problem first by using each force as a whole, and then by using the principle of moments.

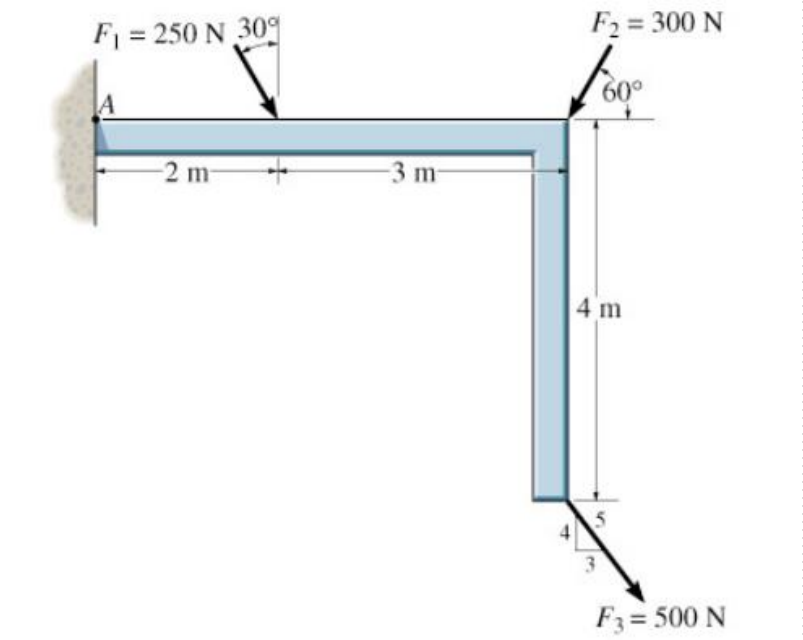

Answer: 433 Nm, 1.30 kNm, 800 Nm

Moment of a couple

- A couple is defined as two parallel forces that have the same magnitude, opposite directions, and are separated by a perpendicular distance d. Since the resultant force of the force composing the couple is zero, the only effect of a couple is to produce a rotation or tendency of rotation in a specified direction.

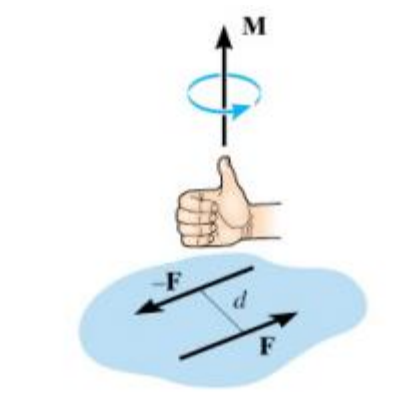

Problem

1. Determine the moment of the couple acting on the machine member shown below

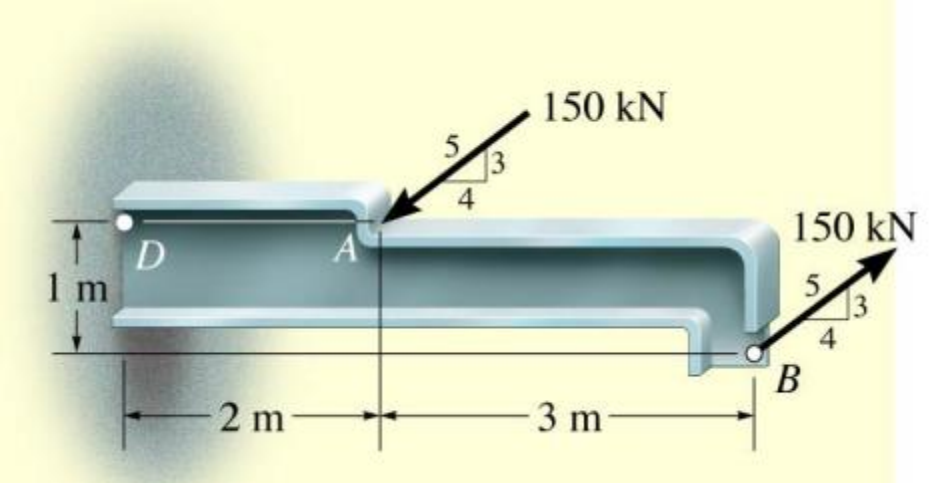

Ans: 390N-m

Problem

2. Replace the three forces acting on the shaft beam by a single resultant force. Specify where the force acts, measured from end A.

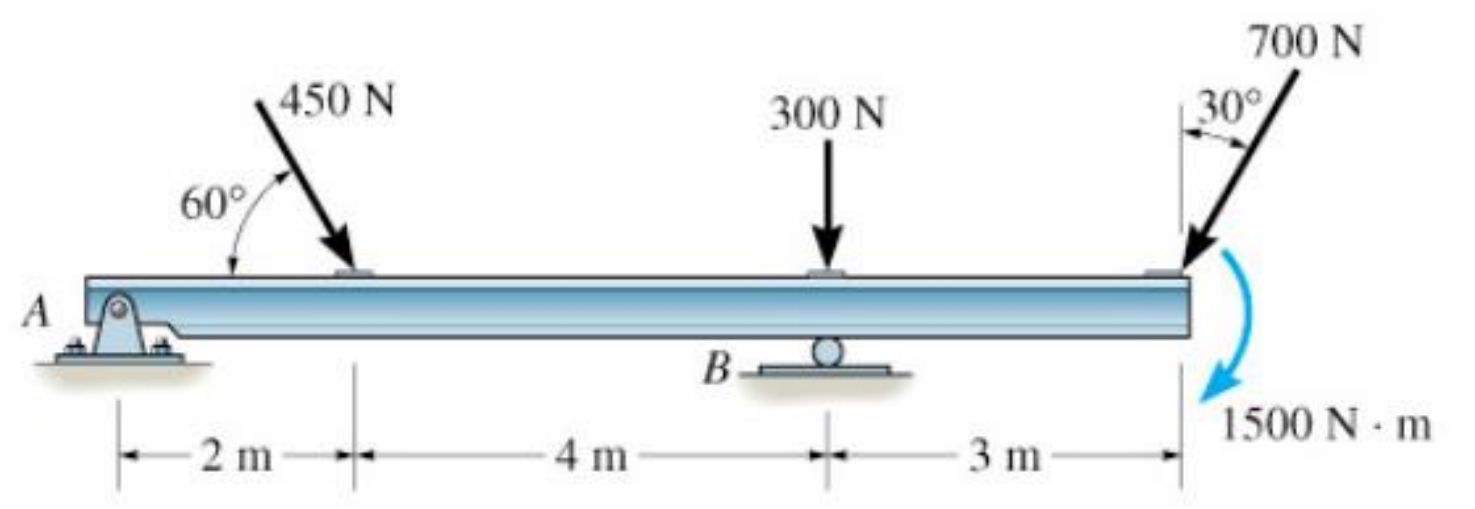

Ans: 1302 N, 84.5°, 7.36 m

Equilibrium of rigid bodies

1. Find the moment at B

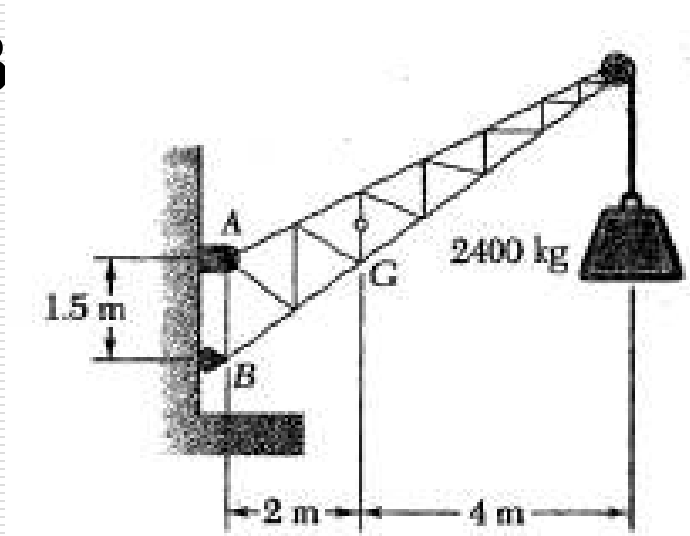

$$\Sigma M_A = 0$$

$$B_x \times 1.5 - 9.81 \times 2 - 23.5 \times 6 = 0$$

$$B_x = 107.1 \text{ kN} \quad \rightarrow$$

$$\Sigma F_x = 0$$

$$A_x + B_x = 0$$

$$A_x = -107.1 \text{ kN} \quad \leftarrow$$

$$\Sigma F_y = 0$$

$$A_y - 9.81 - 23.5 = 0$$

$$A_y = 33.3 \text{ kN} \quad \uparrow$$

$$\Sigma M_B = -9.81 \times 2 - 23.5 \times 6 + 107.1 \times 1.5 = 0$$

2. P= 15kN

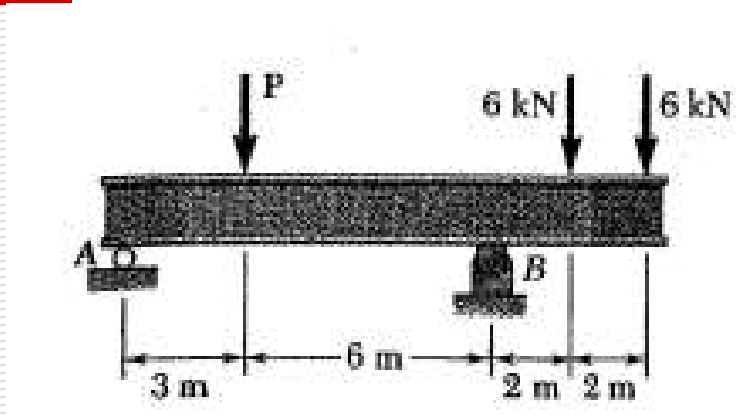

$\Sigma F_x = 0 \quad B_x = 0$

$\Sigma M_A = 0 \quad -15 \times 3 + B_y \times 9 - 6 \times 11 - 6 \times 13 = 0$

$B_y = 21 \text{ kN} \uparrow$

$\Sigma M_B = 0 \quad -A \times 9 + 15 \times 6 - 6 \times 2 - 6 \times 4 = 0$

$A = 6 \text{ kN} \uparrow$

check $\Sigma F_y = 0 \quad 6 - 15 + 21 - 6 - 6 = 0$ (O.K.)

Unit III- Properties of Surfaces and Solids

- Determination of Areas and Volumes
- First moment of area and the Centroid of sections
- Second and product moments of plane area
- Parallel axis theorem and perpendicular axis theorem
- Polar moment of inertia
- Principal moments of inertia of plane areas
- Principal axes of inertia
- Mass moment of inertia

Area

- Square = axa
- Rectangle =lxb
- Triangle = ½(bxh)
- Circle = Л r^2
- Semi circle = Л/2 r^2

Volume

- Cube = a3
- Cuboid = lx b xh
- Sphere = $4/3(Лr^3)$
- Cylinder = $1/3$ $Лr^2$ h
- Hollow cylinder = $л/4xh(D^2-d^2)$

Moment

- *A moment about a given axis is something multiplied by the distance from that axis measured at 90° to the axis.*
- The moment of force is hence force times distance from an axis.
- The moment of mass is mass times distance from an axis.
- The moment of area is area times the distance from an axis.

Calculate the 1st. moment of area for the shape shown about the axis s-s and find the position of the centroid.

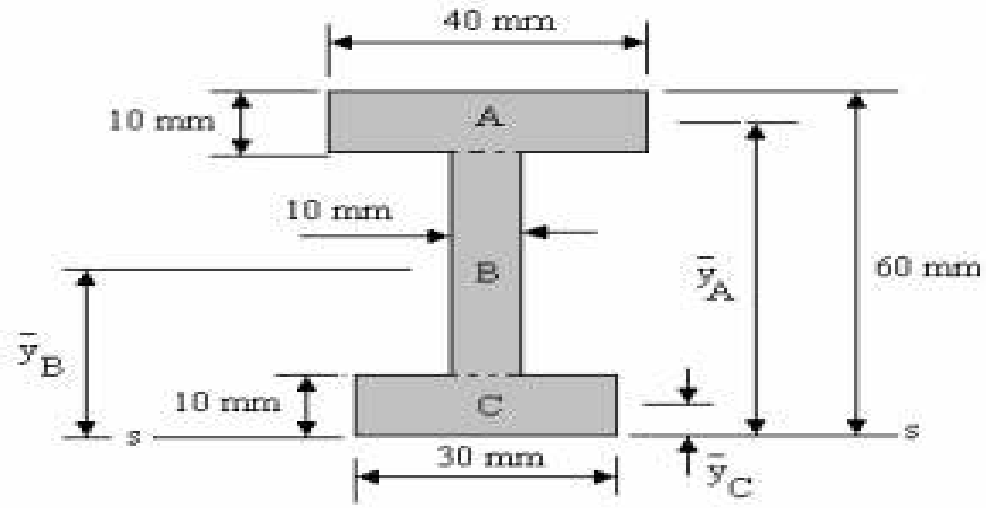

Fig.5

SOLUTION

The shape is not symmetrical so the centroid is not half way between the top and bottom edges. First determine the distance from the axis s-s to the centre of each part A, B and C. A systematic tabular method is recommended.

Part	Area	$\bar{y}$	Ay
A	400	55	22000
B	400	30	12000
C	300	5	1500
Total	1100		35500

The total first moment of area is 35 500 mm^3.
This must also be given by A $\bar{y}$ for the whole section hence
$\bar{y}$ = 35 500/1100 = 32.27 mm.

Second moment

- *If any quantity is multiplied by the distance from the axis s-s twice, we have a second moment. Mass multiplied by a distance twice is called the moment of inertia but is really the second moment of mass. The symbol for both is confusingly a letter I.*

$$I = A\,k^2$$

Parallel Axis theorem

- *The moment of inertia of any object about an axis through its center of mass is the minimum moment of inertia for an axis in that direction in space. The moment of inertia about any axis parallel to that axis through the center of mass*

If we wish to know the 2nd moment of area of a shape about an axis parallel to the one through the centroid (g-g), then the parallel axis theorem is useful.

The parallel axis theorem states $\quad I_{ss} = I_{gg} + A\,(\bar{y})^2$

Consider a rectangle B by D and an axis s-s parallel to axis g-g.

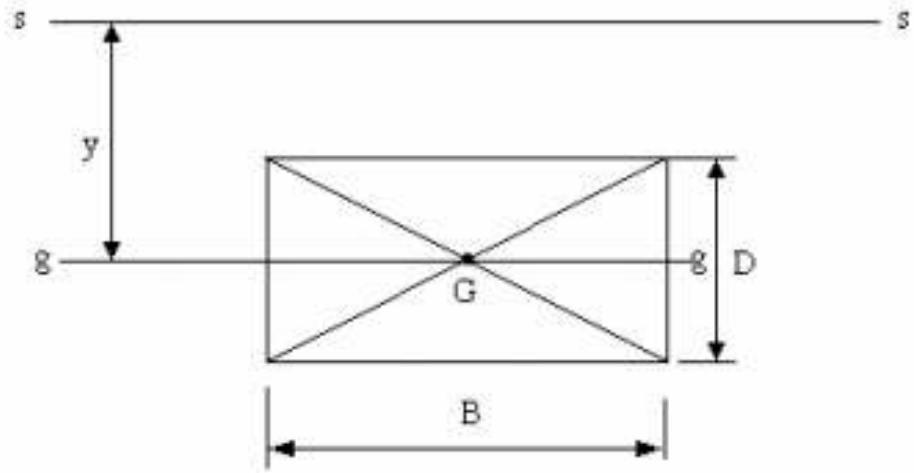

Fig.12

$$I_{gg} = \frac{BD^3}{12} \qquad A = BD \qquad I_{ss} = \frac{BD^3}{12} + BD\bar{y}^2$$

Consider when s-s is the top edge.

$$I_{ss} = \frac{BD^3}{12} + BD\bar{y}^2 \quad \text{but } \bar{y} = \frac{D}{2} \quad \text{so } I_{ss} = \frac{BD^3}{12} + BD\left(\frac{D}{2}\right)^2 = \frac{BD^3}{12}$$

This is the result obtained previously and confirms the method.

Perpendicular Axis theorem

- *For a planar object, the moment of inertia about an axis perpendicular to the plane is the sum of the moments of inertia of two perpendicular axes through the same point in the plane of the object. The utility of this theorem goes beyond that of calculating moments of strictly planar objects. It is a valuable tool in the building up of the moments of inertia of three dimensional objects such as cylinders by breaking them up into planar disks and summing the moments of inertia of the composite disks.*

$$I_z = I_x + I_y$$

Polar Moment of Inertia

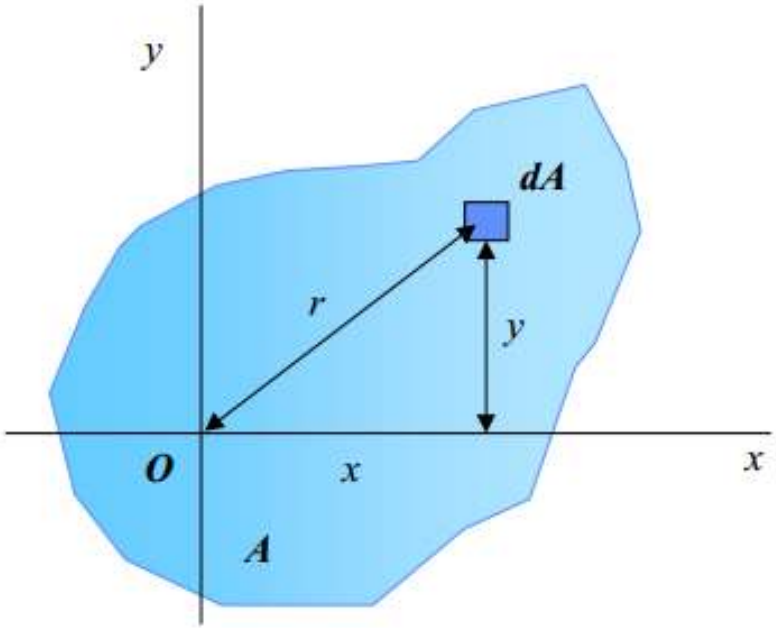

The ***polar moment of inertia of an area A*** with respect to the pole O is defined as

$$J_O = \int r^2 \, dA$$

The distance from O to the element of area dA is r. Observing that $r^2 = x^2 + y^2$, we established the relation

$$J_O = I_x + I_y$$

Mass moment of Inertia

- *The mass moment of inertia is one measure of the distribution of the mass of an object relative to a given axis. The mass moment of inertia is denoted by I and is given for a single particle of mass m as*

$$I_O = r^2 m$$

Unit IV- Friction and Dynamics of Rigid Body

- Frictional force
- Laws of Coloumb friction
- simple contact friction
- Belt friction.
- Translation and Rotation of Rigid Bodies
- Velocity and acceleration
- General Plane motion.

Frictional force

- *The friction force is the force exerted by a surface as an object moves across it or makes an effort to move across it. There are at least two types of friction force - sliding and static friction. Thought it is not always the case, the friction force often opposes the motion of an object. For example, if a book slides across the surface of a desk, then the desk exerts a friction force in the opposite direction of its motion. Friction results from the two surfaces being pressed together closely, causing intermolecular attractive forces between molecules of different surfaces. As such, friction depends upon the nature of the two surfaces and upon the degree to which they are pressed together. The maximum amount of friction force that a surface can exert upon an object can be calculated using the formula below:*

$$F_m = \mu \bullet N_r$$

$F = P * \sin\alpha$

$N = P * \cos\alpha$

$F_{friction} = \mu N$

$F = F_{friction}$

$P * \sin\alpha = \mu N = \mu * P * \cos\alpha$

$\mu = \sin\alpha / \cos\alpha = \tan\alpha$

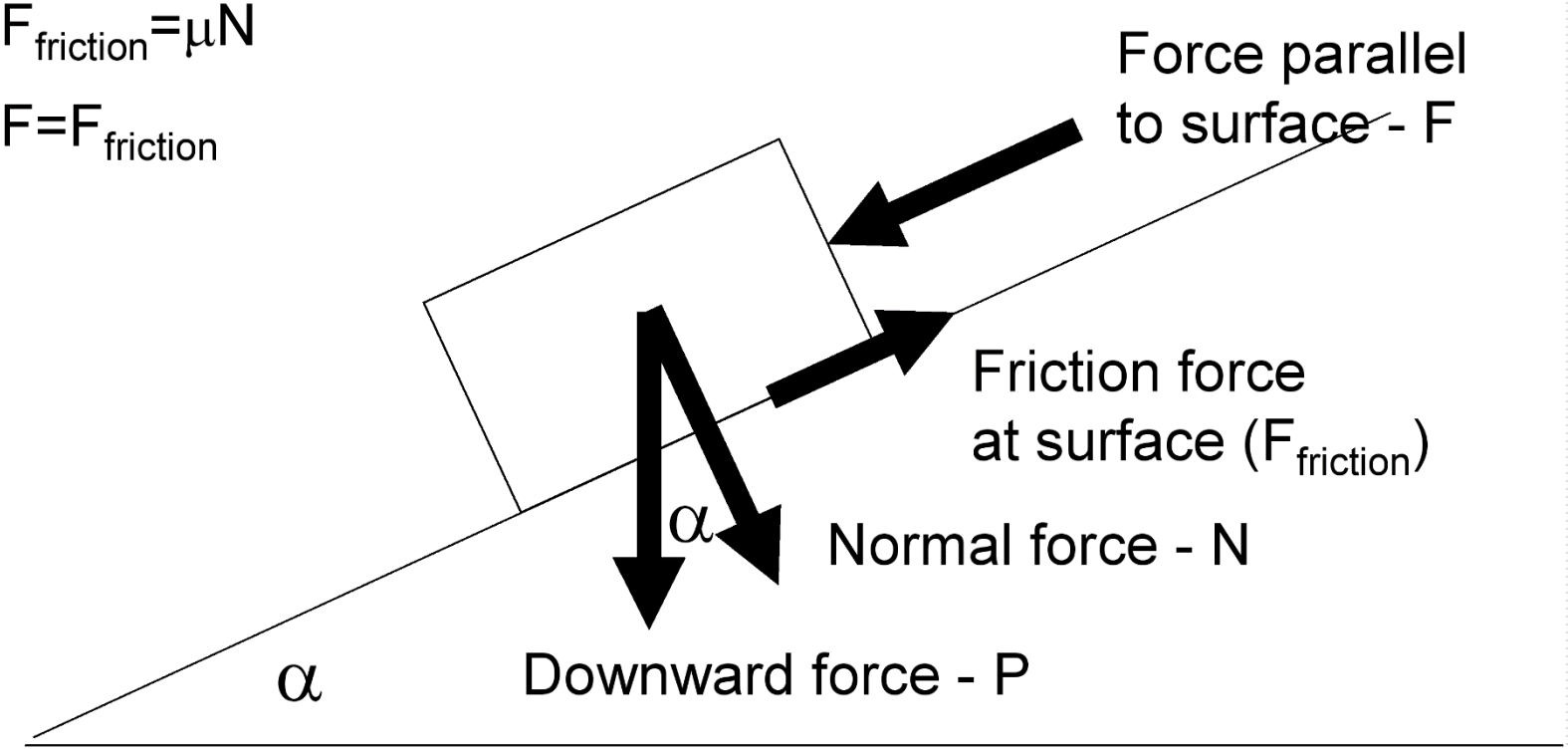

Figure 2 – Derivation of the Coefficient of Friction

Laws of Coulomb

- *The law states that for two dry solid surfaces sliding against one another, the magnitude of the kinetic friction exerted through the surface is independent of the magnitude of the velocity (i.e., the speed) of the slipping of the surfaces against each other.*
- *This states that the magnitude of the friction force is independent of the area of contact between the surfaces.*
- *This states that the magnitude of the friction force between two bodies through a surface of contact is proportional to the normal force between them. A more refined version of the statement is part of the Coulomb model formulation of friction.*

Simple contact friction

- Types of contact friction
  - Ladder Friction
  - Screw Friction
  - Belt Friction
  - Rolling Friction

Belt Friction

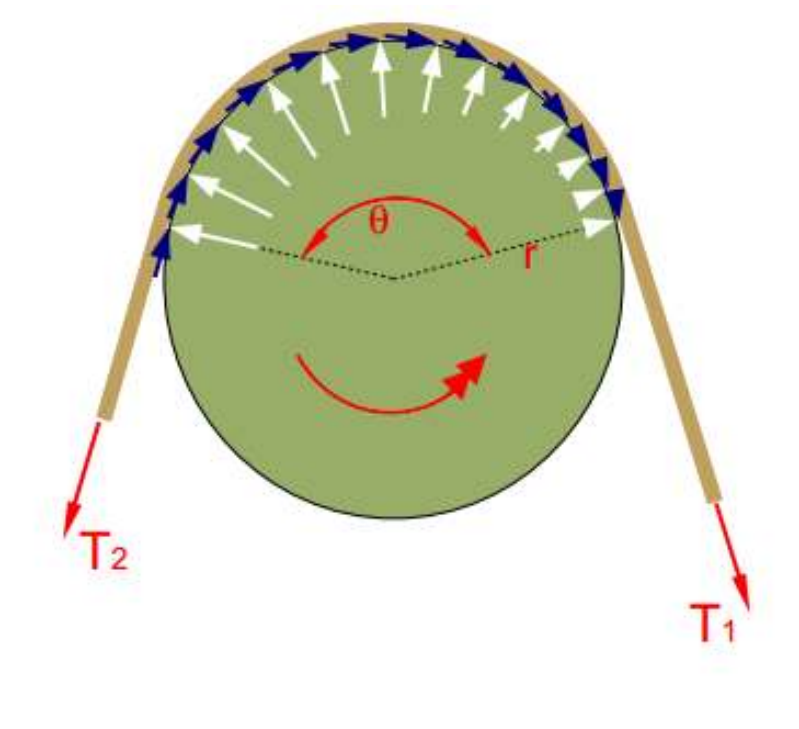

$$T_2/T_1 = e^{\mu\theta}$$

Problem

1. First determine angle of wrap. Draw a construction line at the base of vector T_B and parallel to vector T_A. Angle α is the difference between angles of the two vectors and is equal to 20°. This results in a wrap angle of 200° or 1.11π radians

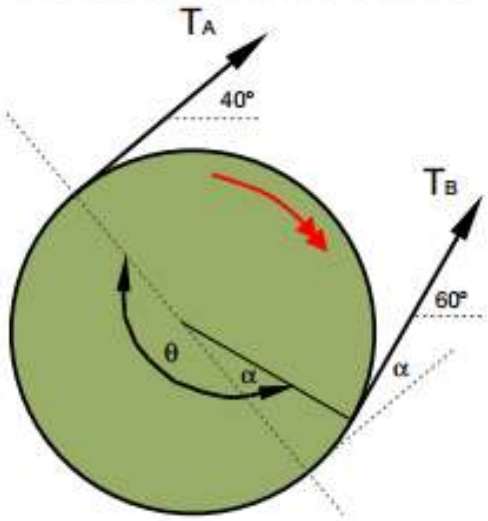

$$\Sigma M_o = T_B \cdot 4\,in - T_A \cdot 4\,in - (30\,ft \cdot lb_f) \cdot 12\,in/ft$$

$$\therefore\ T_B = T_A + 90 \qquad \text{(Moments)}$$

-and-

$$T_B = T_A \cdot e^{0.3 \cdot (1.11\pi)} \qquad \text{(Friction)}$$

<u>Substituting:</u>

$$T_A + 90 = T_A \cdot e^{0.3 \cdot (1.11\pi)} = 2.85 \cdot T_A$$

$$\therefore\ T_A = 48.6\,lb_f \quad \text{and} \quad T_B = 139\,lb_f$$

The application of a V-belt changes only the friction equation. The 38° V is 0.211π radians. Modifying the friction equation changes the solution to:

$$T_A + 90 = T_A \cdot e^{0.3 \cdot (1.11\pi)/\sin(0.106\pi)} = 24.5 \cdot T_A$$

$$\therefore\ T_A = 3.82\,lb_f \quad \text{and} \quad T_B = 98.4\,lb_f$$

Notice the efficiency increase of a V-belt over that of a flat belt. The reduced tensions help increase bearing life

Equations of motion

$$v = u + at \quad [1]$$

$$s = ut + \frac{1}{2}at^2 \quad [2]$$

$$s = \frac{1}{2}(u + v)t \quad [3]$$

$$v^2 = u^2 + 2as \quad [4]$$

$$s = vt - \frac{1}{2}at^2 \quad [5]$$

Problem

1. A car starts from a stoplight and is traveling with a velocity of 10 m/sec east in 20 seconds. What is the acceleration of the car?

- First we identify the information that we are given in the problem:

  v_f - 10 m/sec v_o - 0 m/sec time - 20 seconds

- Then we insert the given information into the acceleration formula:

  $a = (v_f - v_o)/t$ $a = (10 \text{ m/sec} - 0 \text{ m/sec})/20 \text{ sec}$

- Solving the problem gives an acceleration value of 0.5 m/sec^2.

Problems

2. What is the speed of a rocket that travels 9000 meters in 12.12 seconds? **742.57 m/s**
3. What is the speed of a jet plane that travels 528 meters in 4 seconds? **132 m/s**
4. How long will your trip take (in hours) if you travel 350 km at an average speed of 80 km/hr? **4.38 h**
5. How far (in meters) will you travel in 3 minutes running at a rate of 6 m/s? **1,080 m**
6. A trip to Cape Canaveral, Florida takes 10 hours. The distance is 816 km. Calculate the average speed. **81.6 km/h**

Unit V – Dynamics of Particles

- Displacements
- Velocity and acceleration, their relationship
- Relative motion
- Curvilinear motion
- Newton’s law
- Work Energy Equation of particles
- Impulse and Momentum
- Impact of elastic bodies.

Rectilinear motion

- *The particle is classically represented as a point placed somewhere in space. A rectilinear motion is a straight-line motion.*

Problem

$x = t^3 - 6t^2 - 15t + 40$ $\quad x$: m $\quad t$: sec

determine t when $v = 0$, $x(t)$, $a(t)$ at that time, traveling distance from $t = 4 \sim 6$ sec

a. time for $v = 0$

$$v = dx/dt = 3t^2 - 12t - 15$$

$$a = dv/dt = 6t - 12$$

for $v = 0$, $t = -1, 5$ sec

b. at $t = 5$ sec $\quad x = -60$ m

c. at $t = 5$ sec $\quad a = 18$ m/s^2

d. distance traveled from $t = 4$ to 6 sec

$x(4) = -52$ m $\quad x(5) = -60$ m $= x_{min}$ $\quad x(6) = -50$ m

$x_5 - x_4 = -8$ m $\quad x_6 - x_5 = 10$ m

total traveled $= 18$ m

Curvilinear motion

- *The particle is classically represented as a point placed somewhere in space. A curvilinear motion is a motion along a curved path.*

the projectile is fired to hit a target at B

$$v_0 = 240 \text{ m/s} \measuredangle \alpha \qquad a_y = -9.81 \text{ m/s}^2$$

determine the angle α

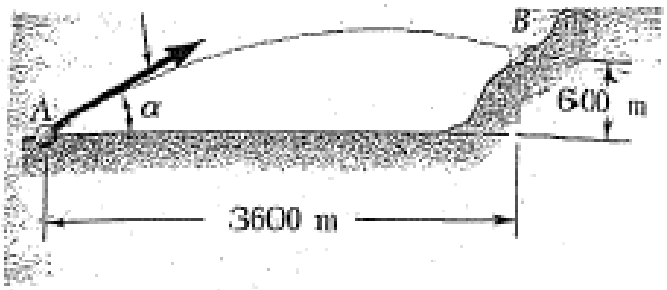

$$(v_x)_0 = 240 \cos \alpha \qquad (v_y)_0 = 240 \sin \alpha$$

$$v_x = (v_x)_0 = 240 \cos \alpha$$

$$x = (v_x)_0 \, t = 240 \cos \alpha \times t$$

$$v_y = (v_y)_0 + a\,t = 240 \sin \alpha - 9.81\,t$$

$$y = (v_x)_0 \, t + \tfrac{1}{2} a\,t^2 = 240 \sin \alpha \times t - 4.90\,t^2$$

for $x = 3600$ m

$$3600 = 240 \cos \alpha \times t \quad \Rightarrow \quad t = 15 / \cos \alpha$$

for $y = 600$ m

$$600 = 240 \sin \alpha \times t - 4.90\,t^2$$

$$= 240 \sin \alpha \, (15/\cos \alpha) - 4.90\,(15/\cos \alpha)^2$$

$$= 3600 \tan \alpha - 4.90 \times 15^2 (1 + \tan^2 \alpha)$$

$$1103 \tan^2 \alpha - 3600 \tan \alpha + 1703 = 0$$

$$\tan \alpha = 0.574 \text{ and } 2.69$$

$$\alpha = 29.9^\circ \text{ and } 69.6^\circ$$

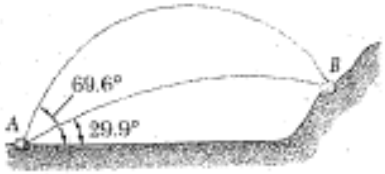

the corresponding times are 17.3 and 43.03 sec

Newton`s law problems

1. A mass of 3 kg rests on a horizontal plane. The plane is gradually inclined until at an angle $\theta = 20°$ with the horizontal, the mass just begins to slide. What is the coefficient of static friction between the block and the surface?

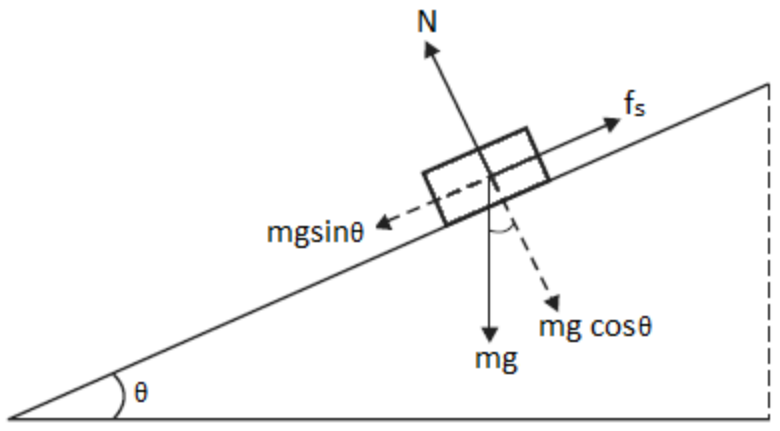

Again we begin by drawing a figure containing all the forces acting on the mass. Now, instead of drawing another free body diagram, we should be able to see it in this figure itself.An important thing to keep in mind here is that we have resolved the force of gravity into its components and we must not consider m**g** during calculations if we are taking its components into account.

Now, as θ increases, the self-adjusting frictional force fs increases until at $\theta = \theta max$, fs achieves its maximum value, $(fs)max = \mu sN$.

Therefore, $\tan\theta max = \mu s$ *or* $\theta max = \tan{-1}\mu s$

When θ becomes just a little more than θmax, there is a small net force on the block and it begins to slide.

Hence, for $\theta max = 20°$,

$\boldsymbol{\mu s = \tan 20° = 0.36}$

2. A ball of mass 5 kg and a block of mass 12 kg are attached by a lightweight cord that passes over a frictionless pulley of negligible mass as shown in the figure. The block lies on a frictionless incline of angle 30°. Find the magnitude of the acceleration of the two objects and the tension in the cord. Take g = 10 ms^{-2}.

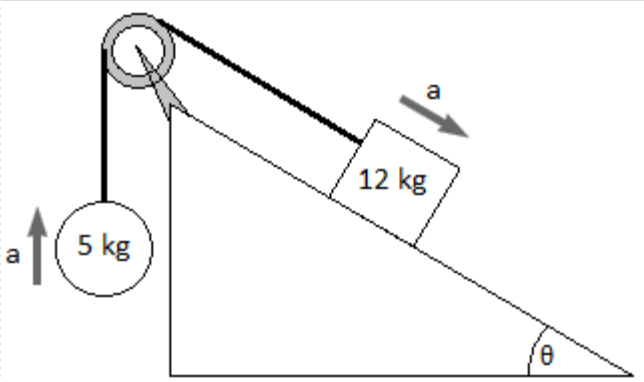

T= 52.94N

a= 0.59m/s²

3. A 75.0 kg man stands on a platform scale in an elevator. Starting from rest, the elevator ascends, attaining its maximum speed of 1.20 m/s in 1.00 s. It travels with this constant speed for the next 10.00 s. The elevator then undergoes a uniform acceleration in the negative *y* direction for 1.70 s and comes to rest. What does the scale register

(a) before the elevator starts to move?

(b) during the first 1.00 s?

(c) while the elevator is traveling at constant speed?

(d) during the time it is slowing down? Take $g = 10\ ms^{-2}$.

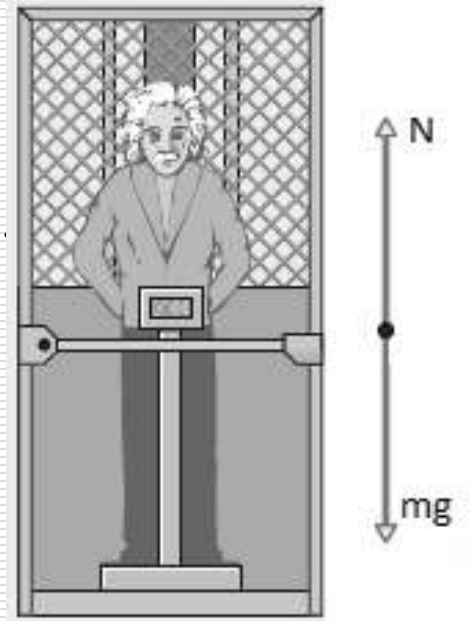

a) F=750N
b) F=660N
c) F=750N
d) F=802.5N

Work Energy Equation

- The work done on the object by the net force = the object's change in kinetic energy.

$$F_{net}d = \frac{1}{2}mv^2 - \frac{1}{2}mv_0^2$$

Impulse and momentum

- Impulse

  The impulse of the force is equal to the change of the momentum of the object.

$$\Delta\vec{p} = \vec{J}$$

- Momentum

  The total momentum before the collision is equal to the total momentum after the collision

$$\vec{p} = m\vec{v}$$

The End